NORTH CAROLINA TRENCH/ROPE RESCUE TECHNICIAN

Anchor Systems

Objectives:

- Identify, construct, and demonstrate:
  - Various single point anchor systems.
  - A 2 & 3 point load sharing anchor system.
  - A two point and a three-point load distributing anchor system.
  - Various lifting systems using timbers for the purpose of moving victims during rope rescue incidents.
  - Types of lifting systems using ladders for the purpose of moving victims during rope rescue incidents.

Objectives:

- Identify, construct, and demonstrate:
- Anchor Systems:
  - Single point anchors
  - Tiebacks
  - Multi-point Anchors
    - Load Sharing
      - 2 & 3 points
    - Load Distributing
      - 2 & 3 points
  - Natural & Artificial Anchors
    - Cams, Bolts, Screws, Pitons
    - Picket systems

OBJECTIVES:

- Natural & Artificial High Directionals
  - Timber Rigging
    - A-Frames

OBJECTIVES:

- Ladder Rigging
  - Ladder A-frame
  - Ladder as a Derrick
  - Ladder Slide

Objectives:

- Commercial Anchor Systems
  - Tripods
  - I-Beam Clamps
  - Arizona Vortex

Anchors:

- Anchors and a high angle system interact with each other.
- Anchor points are the object(s) to which web slings, ropes are secured.

Anchors:

- Secure ropes, hardware and or software to a solid object.
- An anchor in the high angle system is like a foundation in a structure.
- Anchor points are the object to which anchors are secured.
  - Single Point
  - Two-Point
  - Three-Point or more

Anchors:

- Take many forms:
  - Natural
    - Most common natural anchors include trees and rocks. Both have potential for failure.
  - Portable
    - Timber A Frames, Timber tripods
  - Commercial artificial anchors.
    - Tripods; Larkin Frames; Arizona Vortex' High directionals

NATURAL ANCHORS

- Examine trees for weakness (BFT)
  - Greater than 4” in diameter
  - Rotting
  - Exposed or shallow root system
  - Soft or saturated soil.
- Check boulders for stability and solidity.
  - Sharp edges need padding
  - Wrap as low to ground as possible

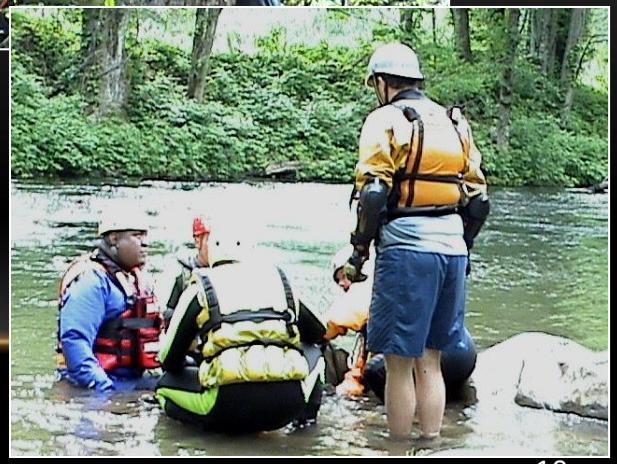

STRUCTURAL ANCHORS:

- Select:
  - Anchors that are inherently part of the structure or specifically designed to support rescue loads.
  - Inherent anchor points include:
    - Structural columns
    - Beams or projections off structural beams
    - Supports for large industrial machinery
    - Stairwell supported beams
    - Anchors for window cleaning equipment

Inappropriate anchors:

- Corroded metal
- Weathered stonework
- Deteriorated mortar
- Sheet metal vents
- Flashing, gutters and downspouts, small chimneys and fire hydrants.

LESS OBVIOUS ANCHORS:

- Elevator and machine housings
- Roof drain holes (scuppers)
  - Tiebacks, using timbers or pipes, can be secured through the scupper hole on parapet walls to create anchor points.
- Wall sections between windows and doors.
- Open stairwell beams.

Artificial Anchors

- Specifically designed for creating anchor points in places where natural anchors are unavailable,
- Used primarily in a wilderness setting.
  - Nuts, chocks, hexcentrics, and cams
  - Bolts
    - Time consuming to set
    - Not the first choice for rescue operations.
  - Artificial anchors should be constructed by someone with a great deal of skill and practice in their use. (who?)

Anchor Placement

- Criteria for placing anchors.
  - Placing secured anchors is dependent on:
    - Training
    - Practice
    - Experience
    - Judgment
  - Anchors must be able to withstand the greatest anticipated force of the rescue system.
  - An anchor's capability ability to withstand the forces put upon it depends on:
    - Condition of the anchor
    - Integrity of the anchor
    - Direction of the force upon the anchor point.

DIRECTION PULLED UPON AN ANCHOR CAN AFFECT THE FORCE APPLIED.

- Set anchors that align with the direction of pull.
- Effects of the direction of pull changes.
- Some anchors are rigged so they are strong in one direction only.
- A change the direction and the anchor system may be compromised or may fail.

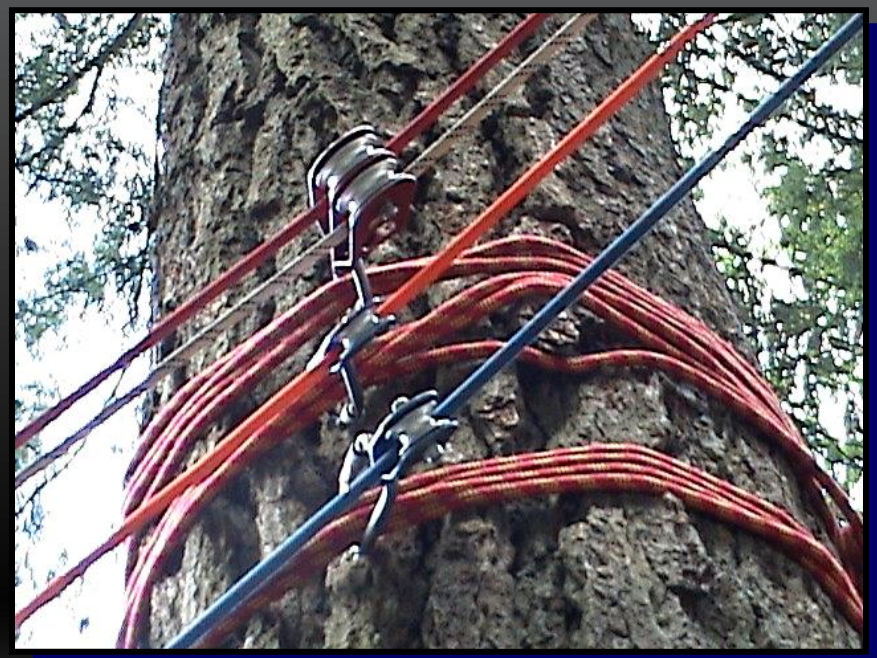

BACK-UP ANCHOR SYSTEMS

- Suggested for all questionable single anchor points.
  - Is called a back-tie.
  - Select a strong anchor located behind the primary anchor.
  - Create a MAS to pull from one anchor to the other.

Selecting A Suitable Anchor Point

- Anchor points should be close to and directly above the victim.
- Location of adjacent suitable anchors
- Assess for hazards to rescuer & victim
  - Loose rocks or other objects falling on the rescuers or victim.
  - Wildlife *(bees, snakes, pets, vegetation…)*
  - "Widowmakers" or Debris
  - Flame impingement.
  - There may not be suitable anchor points directly above the load.
  - Ground conditions
  - Access to anchors

Anchoring To A Vehicle:

- Potential anchors:
- Axles, cross members, and secure towing points on a vehicle.
- Large amount of material may be required
- Remove keys from the ignition
- Set the emergency brake
- Chock the wheels.
- Protect from abrasion and fluids.

Directional Anchors (COD's)

- *Changes of direction (COD) of a rope into a more favorable position.*
- Establishes a second anchor that is below and to one side of the original anchor point and in close proximity to the main line.
- Using a lifeline, which can be adjusted in length, is secured between the secondary anchor point and the mainline.
- Adjusting the length on the secondary lifeline, pulls the mainline into a better position.

Directional Anchors (COD's)

- Used to:
  - Avoid abrasion
  - Elevate ropes
  - Make sharp turns
  - Re-direct a hauling system pull
  - Make sure the same amount of attention used to select a primary anchor point is used to select the anchor point for the directional line.

Back-up Anchors

- Backing up a primary anchor creates redundant anchors for the purpose of safety.
- Employed when there is an uncertainty of the strength of an anchor.
- Type of back-up anchor is based on the condition of the anchor points, the nature of the high angle experience, and the loads.

Pro's & Con's Ropes Used as Anchors

- Life Safety Ropes must be used!!
- 30' Body Cords
- Static Anchors
- Abrasion Protection
- Strength (General use)
- More expensive
- Single Point Anchors
- Multiple Point Anchors

Webbing For Anchors

- Less expensive than rope
- Fewer knots to be learned.
- Cannot be tied using as many knots as rope.
- Less Strength. Do not absorb shock loading as well as ropes.
- Easier to carry in hasty packs
- Can be extended readily
- Conforms to anchor
- Less abrasion protection

Webbing For Anchors

- Is Bigger really Better?
  - *In reality the larger webbing inserted through a standard size locking carabiner and then loaded can reduce the load strength of the carabiner up to 50 % of its rated capacity.*
  - 2” is required whenever webbing comes into contact with a human being.
  - 1” inch tubular webbing tensile strength is between 4000-4500 pounds.
  - One inch of flat webbing, although a little frustrating when dressing down knots, is rated at 6000 pounds which is the same rating for most 2” webbing.

Pre-sewn Web Slings:

- To pre-tie or not to pre tie that is the question…
  - As a general rule, do not leave knots tied in webbing after using them, unless each sling is carefully inspected before returning it to the equipment box and inspected prior to its next use.
  - Deploy quicker
  - Less errors in knots
  - Quick attachment
  - Verify tensile strength for life safety. How?

Anchor straps:

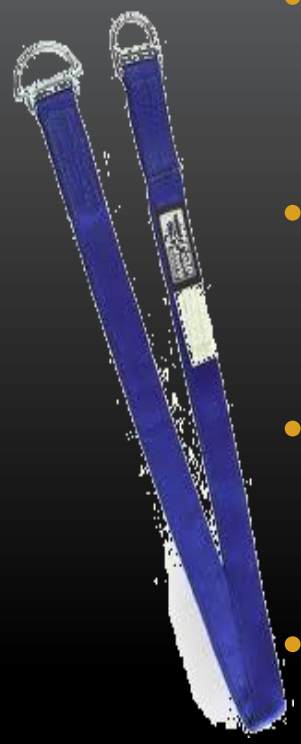

- Webbing lengths with metal "D" rings sewn into each end to accommodate an appropriate size carabiner.
- Heavy-duty strap with the NFPA "G" for general use designation has an end to end breaking strength of 8,000 pounds.
- Light duty strap with the NFPA "L" for light use designation has an end-to-end breaking strength of 4,900 pounds.
- Under heavy loads adjustment buckles can slip.

For Keeping Anchors In Position

- On vertical style anchors (trees, posts, poles…), slings should be secured as low as possible.
- With a strong anchor available, there may be situations when it is necessary to elevate the anchor, creating a better angle to reduce rope abrasion
- May improve conditions for manipulating a litter over the edge.
- It may reduce friction in a hauling systems.
- Hazard… if the strength of the vertical anchor is questionable causing failure when loaded.

Tensionless Hitch or "No Knot"

SINGLE POINT ANCHORS

Open web sling
Simple Anchor

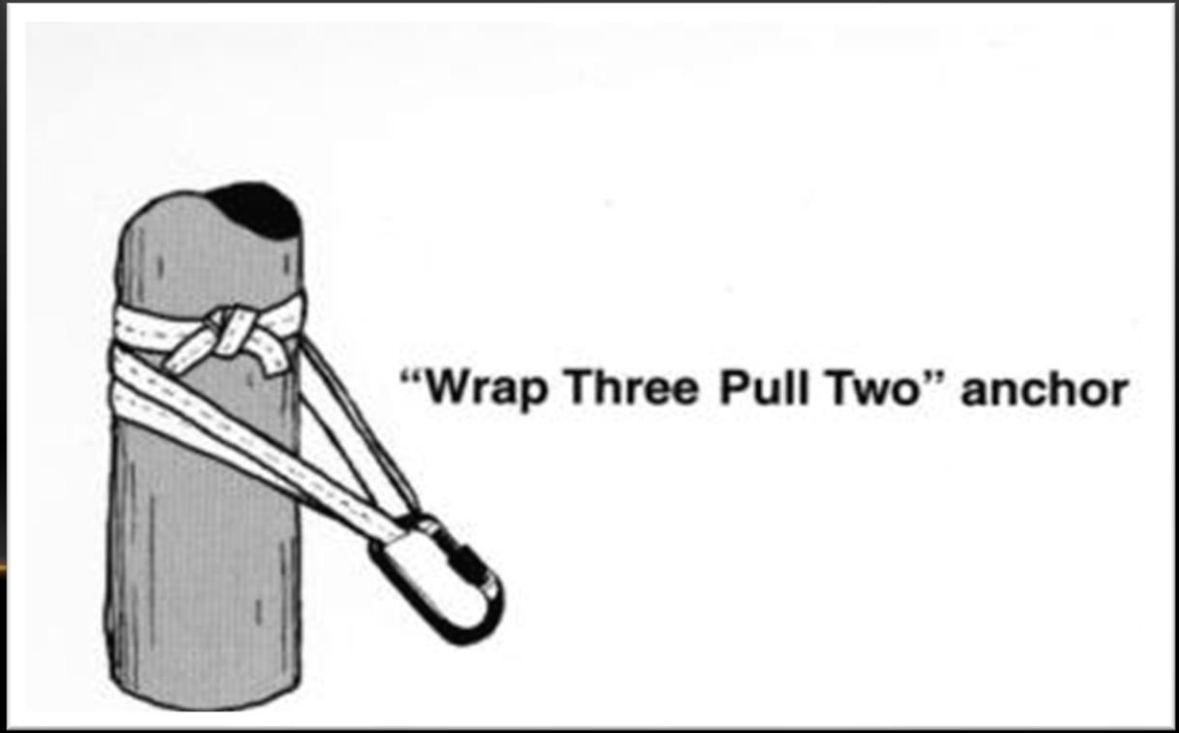

Web Sling
3 Bight Anchor

Multi-Wrapped
web Sling
3 Bight Anchor

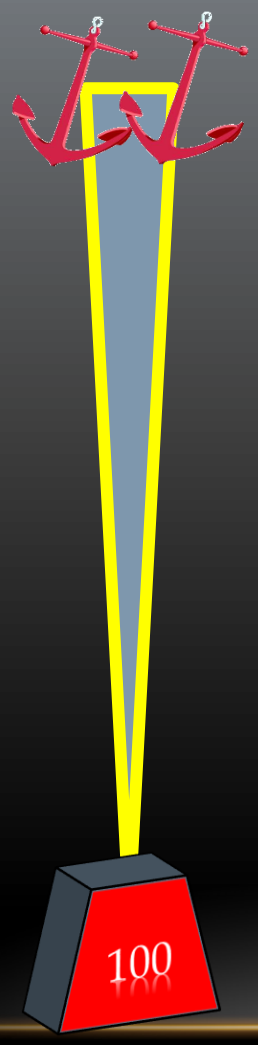

Angle	Force
0°	0
45°	54 lbs.
90°	71 lbs.
120°	100 lbs.
145°	166 lbs.

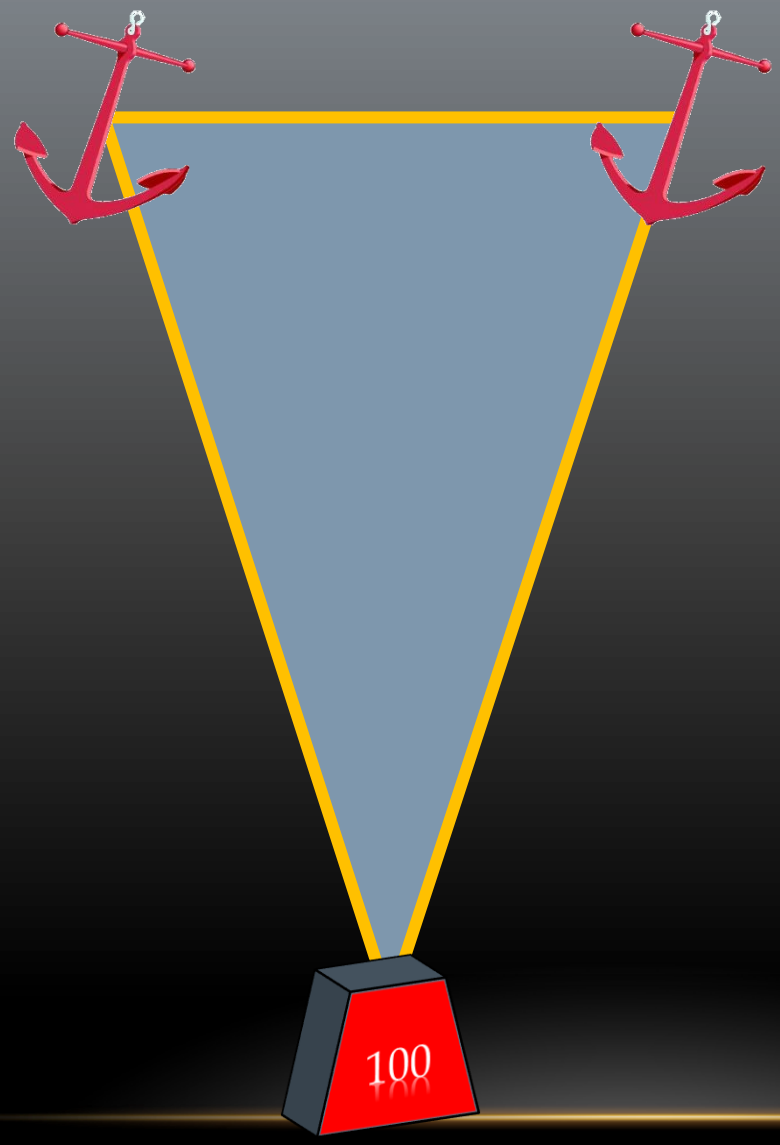

Angle	Force
0°	0
45°	54 lbs.
90°	71 lbs.
120°	100 lbs.
145°	166 lbs.

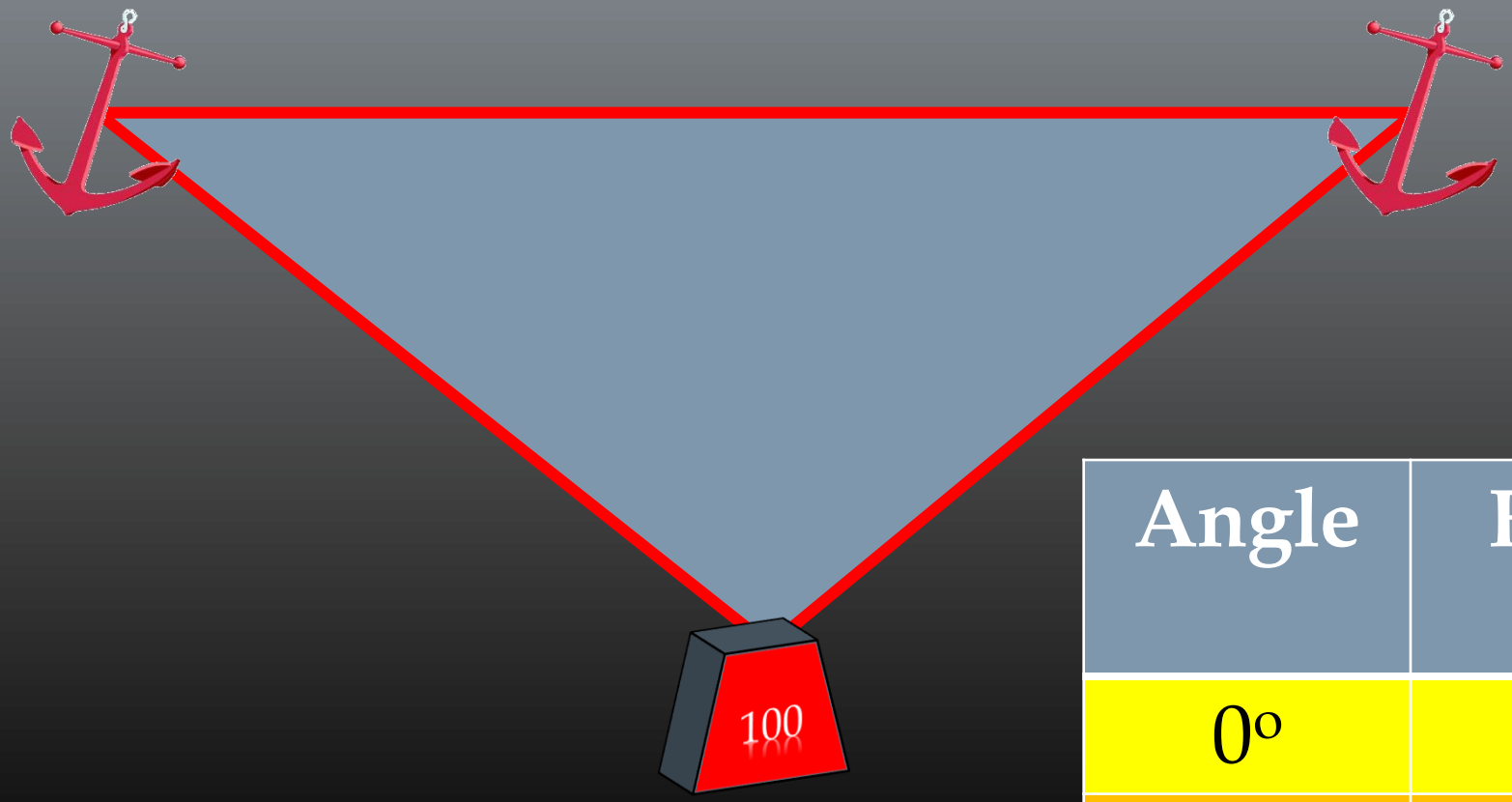

Angle	Force
0°	0
45°	54 lbs.
90°	71 lbs.
120°	100 lbs.
145°	166 lbs.

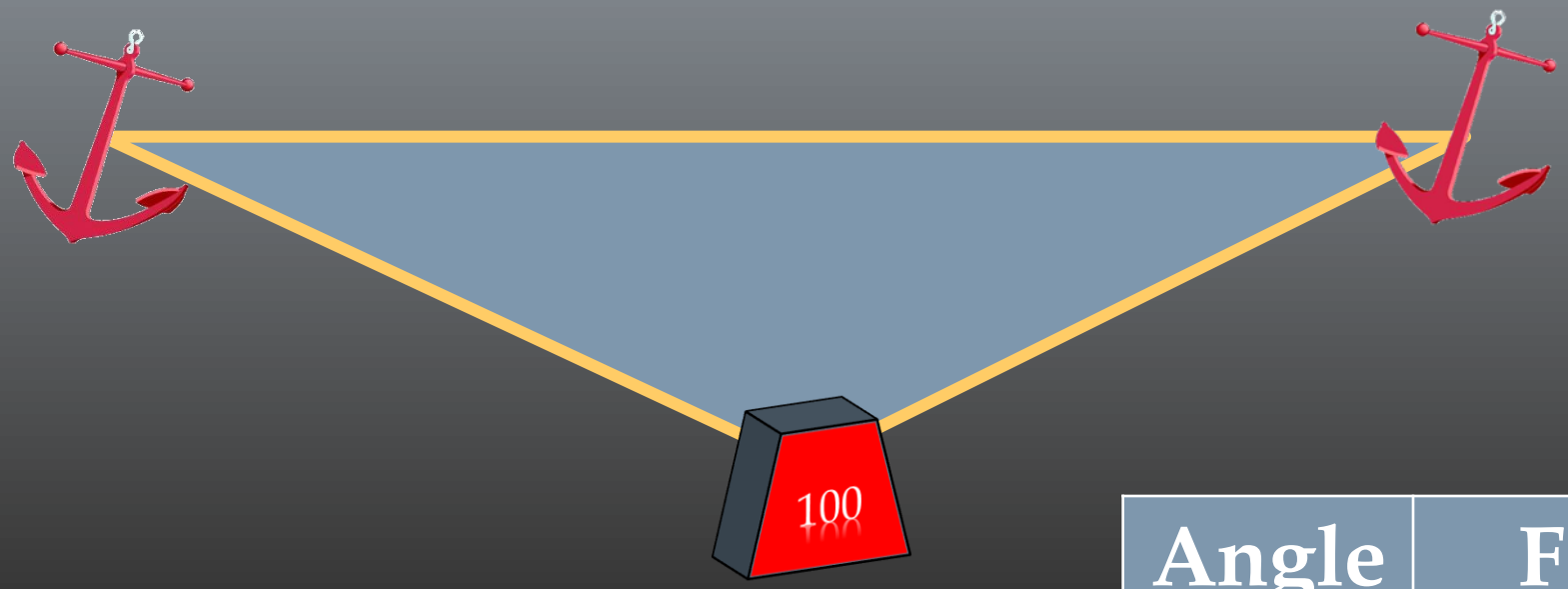

Angle	Force
0º	0
45º	54 lbs.
90º	71 lbs.
120º	100 lbs.
145º	166 lbs.

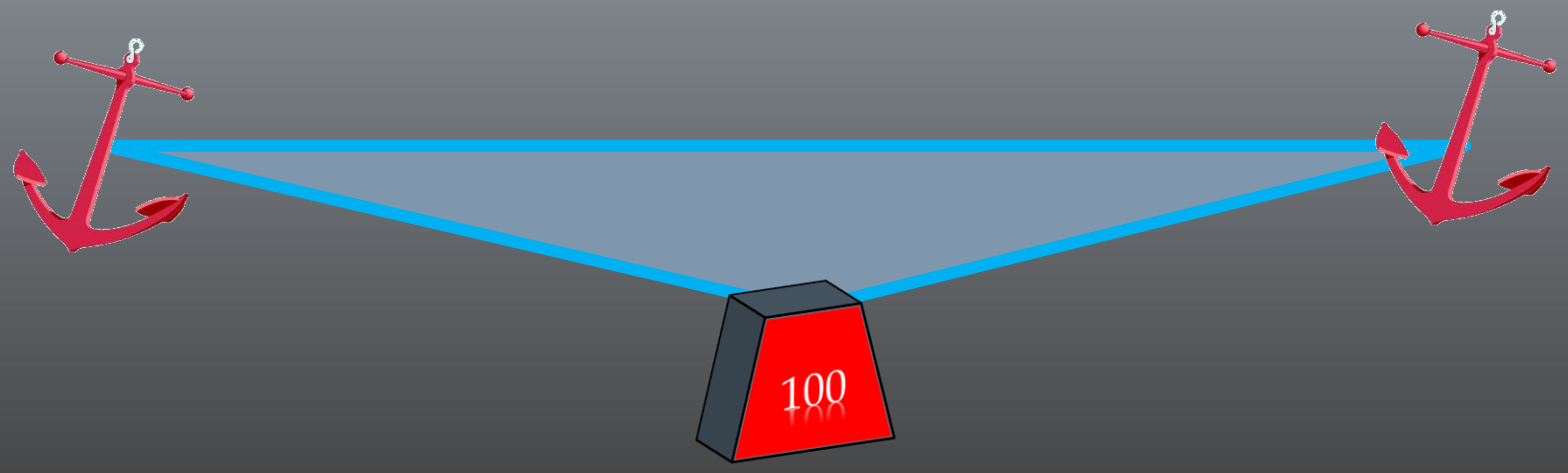

Angle	Force
0°	0
45°	54 lbs.
90°	71 lbs.
120°	100 lbs.
145°	166 lbs.

Two-Point Load Sharing

Three-Point Load Sharing

Load Sharing Anchor

- *Useful when the integrity of a single anchor is questionable*
- *The location of the single anchor point in relationship to the load is in an inconvenient place for attaching to the load.*
- All anchors are marginal anchors and must be shared.
- If the load shifts laterally, the disadvantage is that both anchors no longer support the weight of the load equally.

Two-Point Load Distributing

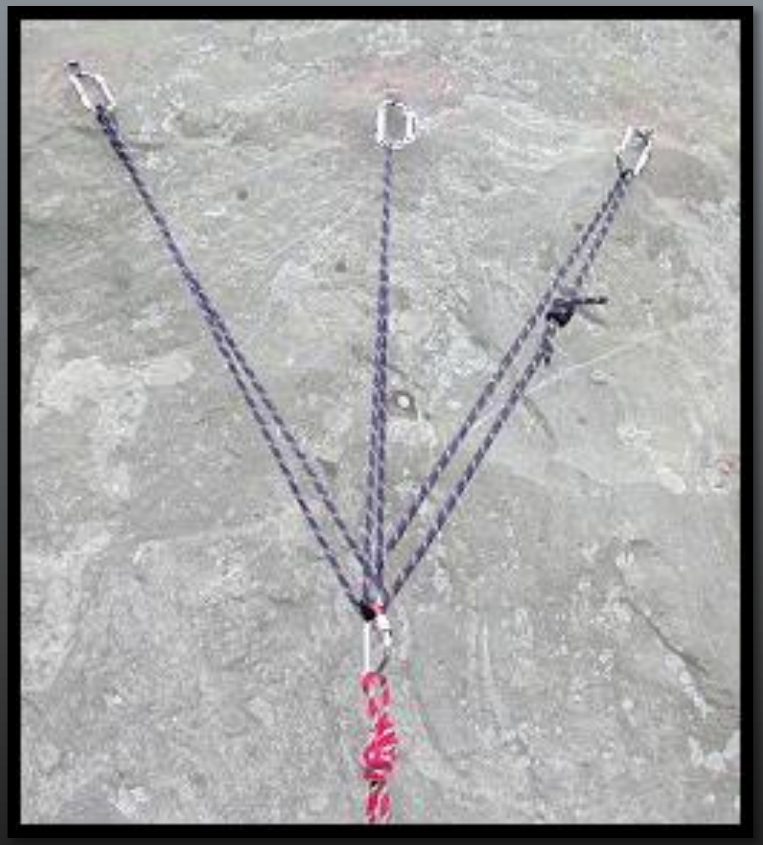

Three-Point Load Distributing

Load Distributing Anchor

- *Used when a single anchor point isn't strong enough to support the load and a potential exists for a direction shift of the pull or load to change*.
- A disadvantage of this system is if the selected anchors are not individually strong enough to sustain a shock load, then an anchor could fail imposing dynamic energy on the other anchor thus causing the remaining anchor to fail.

When attaching locking carabiners to any system, make sure the locking nut is facing towards the load.

This reduces the chance of the gate accidentally opening as a result of vibration.

Extending Anchors

- Used to decrease the angle between the anchors to an acceptable degree.
- Must use static lifeline rope or webbing rated for load.
- Protect all contact points.

Anchor Plates Or Rigging Plates

- Help organize anchor rigging and reduce the possibility system from jamming.
- Makes rigging system easier to see reducing errors.
- Used when multiple lines come to a common point.
- Use nfpa rating of “g” general use.
- Can also be used as an attachment point for litter bridles.

PORTABLE ANCHORS

Steadfast Pickett Anchors

- Used in a natural setting such a soil when no other anchors are available.
- Soft soils do not accommodate a picket system well.
- *Should be driven into the ground approximately two-thirds their length at an angle of 15° away from the object to be moved.*
- Should be driven into the ground at a distance apart equal to their length. Pickets should never be less than three feet apart.
- Lashed together with a 1/2" x 25-50' rope.
- Spinner rod (minimum 2 foot by 3/8" diameter) use a PVC pipe as a buffer.

1” cold rolled Steel; 5’ long picket driven 2/3’s it’s length into the ground at *a 15 degree angle away from the load*.

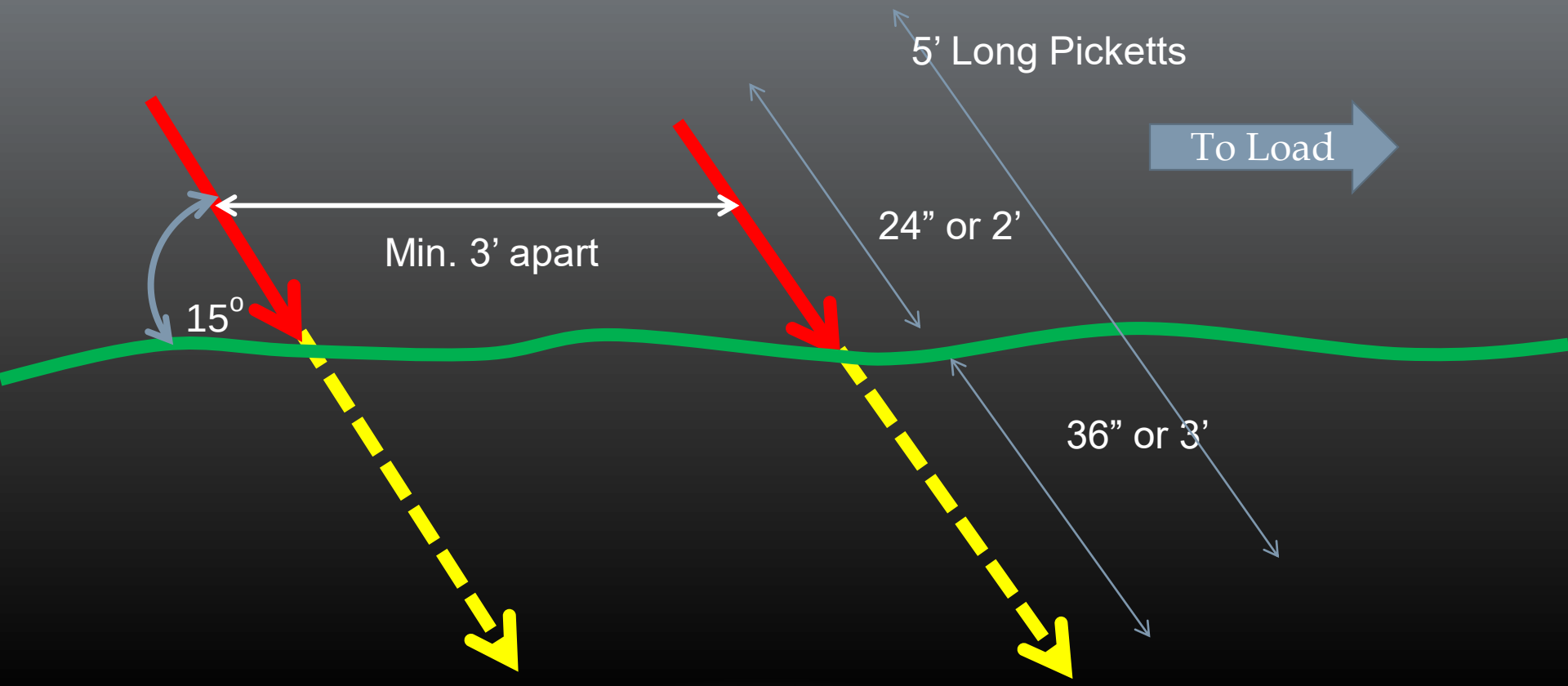

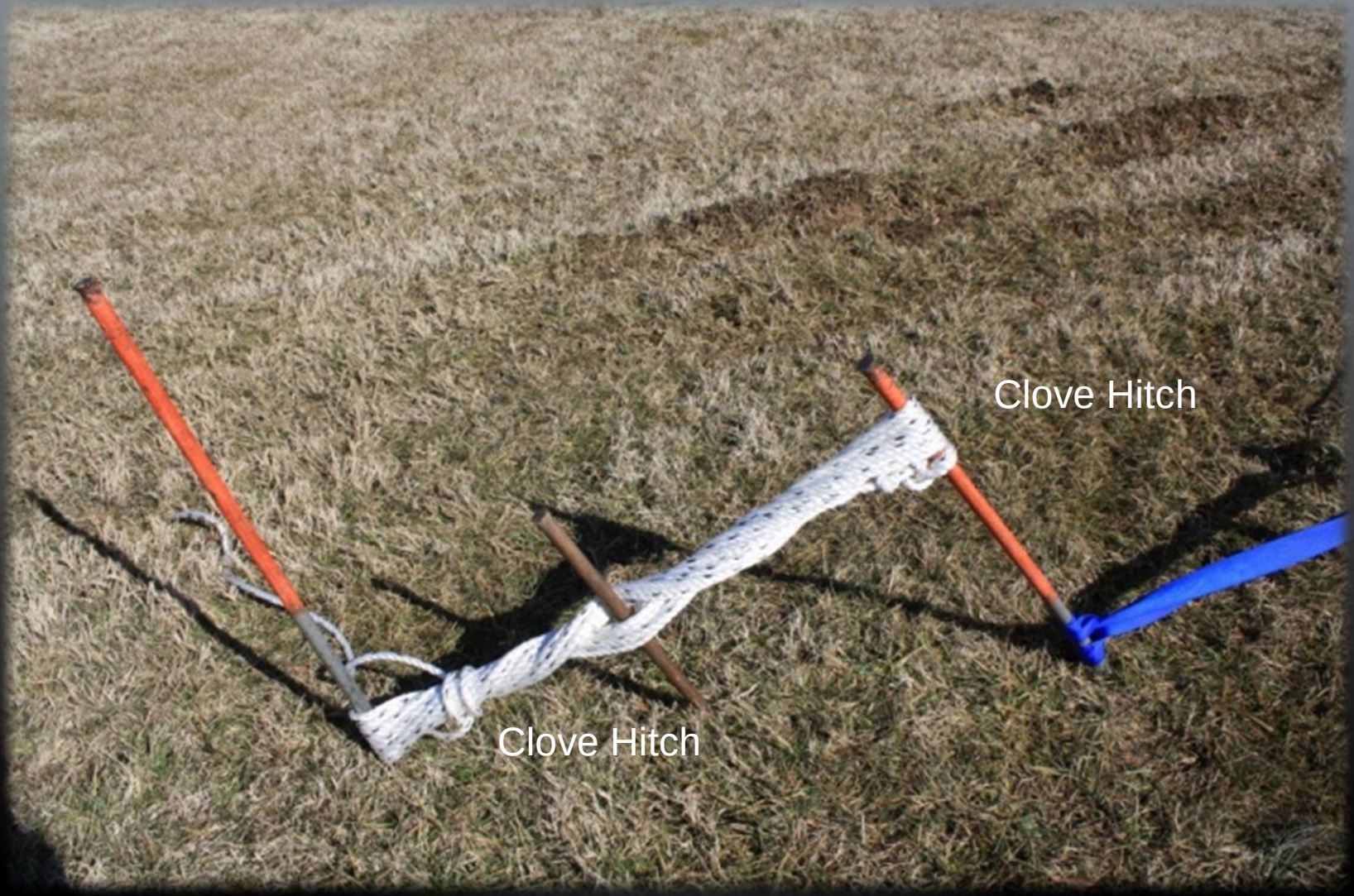
Clove Hitch
Clove Hitch

STEADFAST PICKETT ANCHORS

- Load capacities when constructed in average soil.
- Single Picket System- 700 pounds.
- 1:1 Combination- 1400 pounds.
- 1:1:1 Combination- 2000 pounds
- 3:2:1 Combination – 4000 pounds

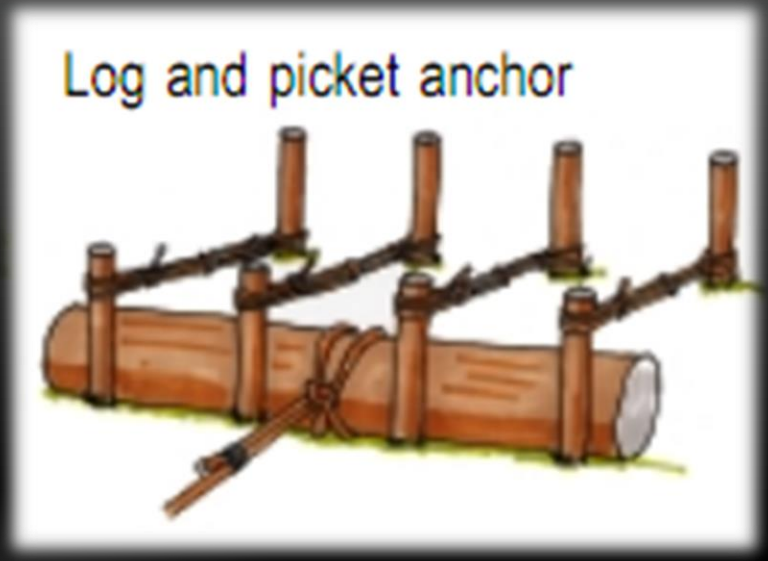
Log and picket anchor

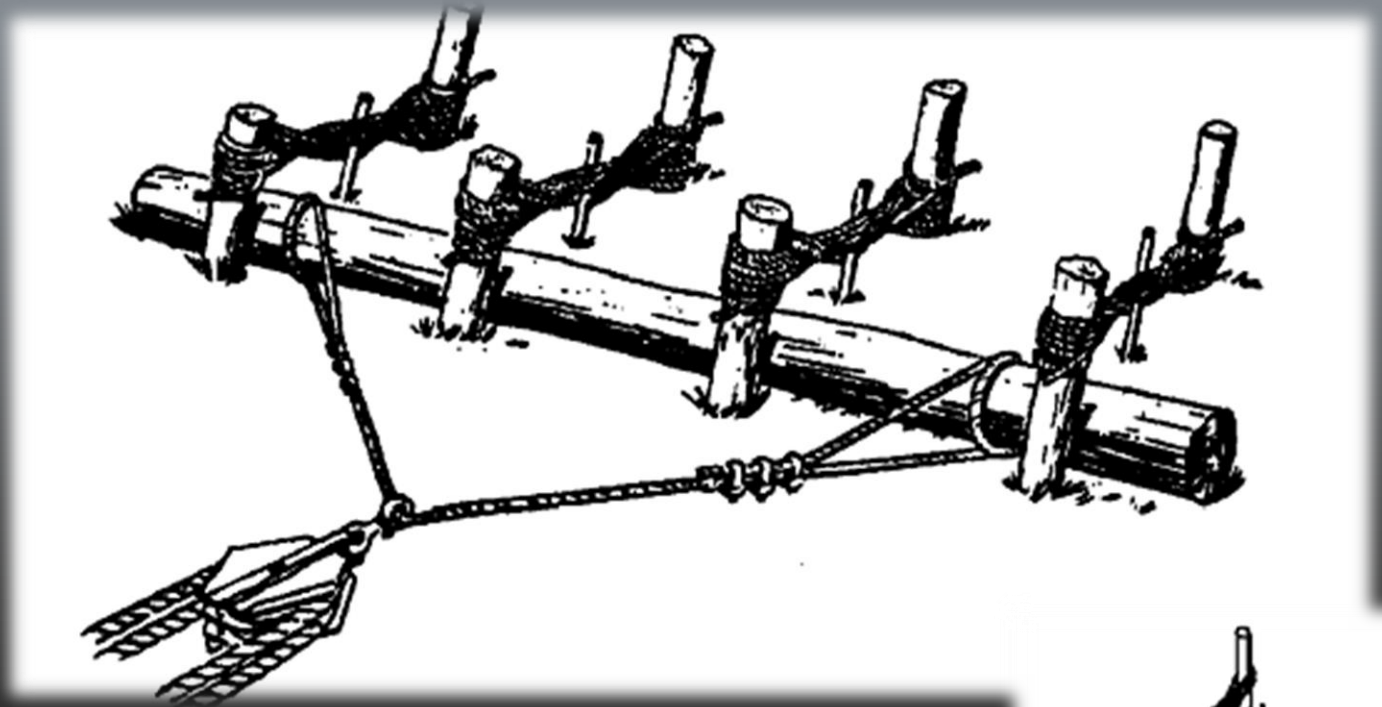

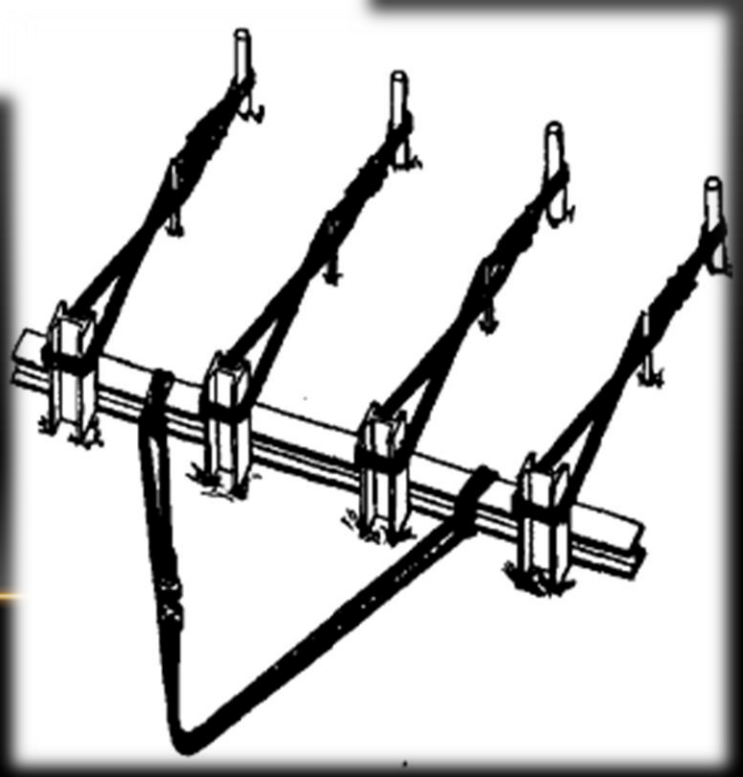

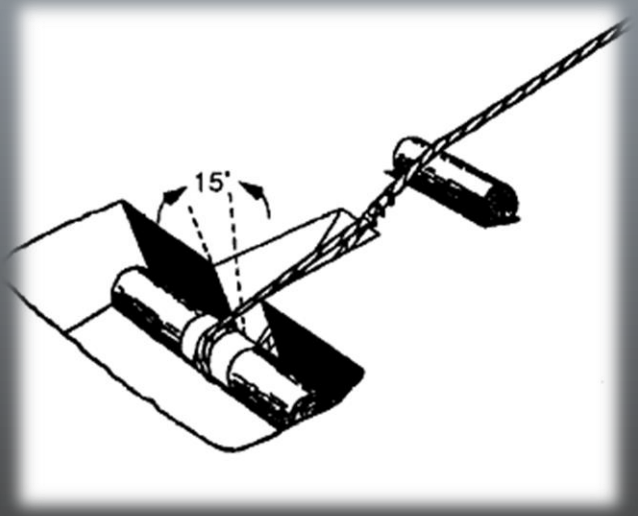

Table 4-2. Holding power of deadmen in ordinary soil

Mean Depth of Anchorage (feet)	Inclination of Pull (Vertical to Horizontal) and Safe Resistance of the Projected Area of the Deadman (pounds per square foot [psf])				
	Vertical	1:1 (45°)	1:2 (26.5°)	1:3 (18:5°)	1:4 (14°)
3	600	950	1,300	1,450	1,500
4	1,050	1,750	2,200	2,600	2,700
5	1,700	2,800	3,600	4,000	4,100
6	2,400	3,800	5,100	5,800	6,000
7	3,200	5,100	7,000	8,000	8,400

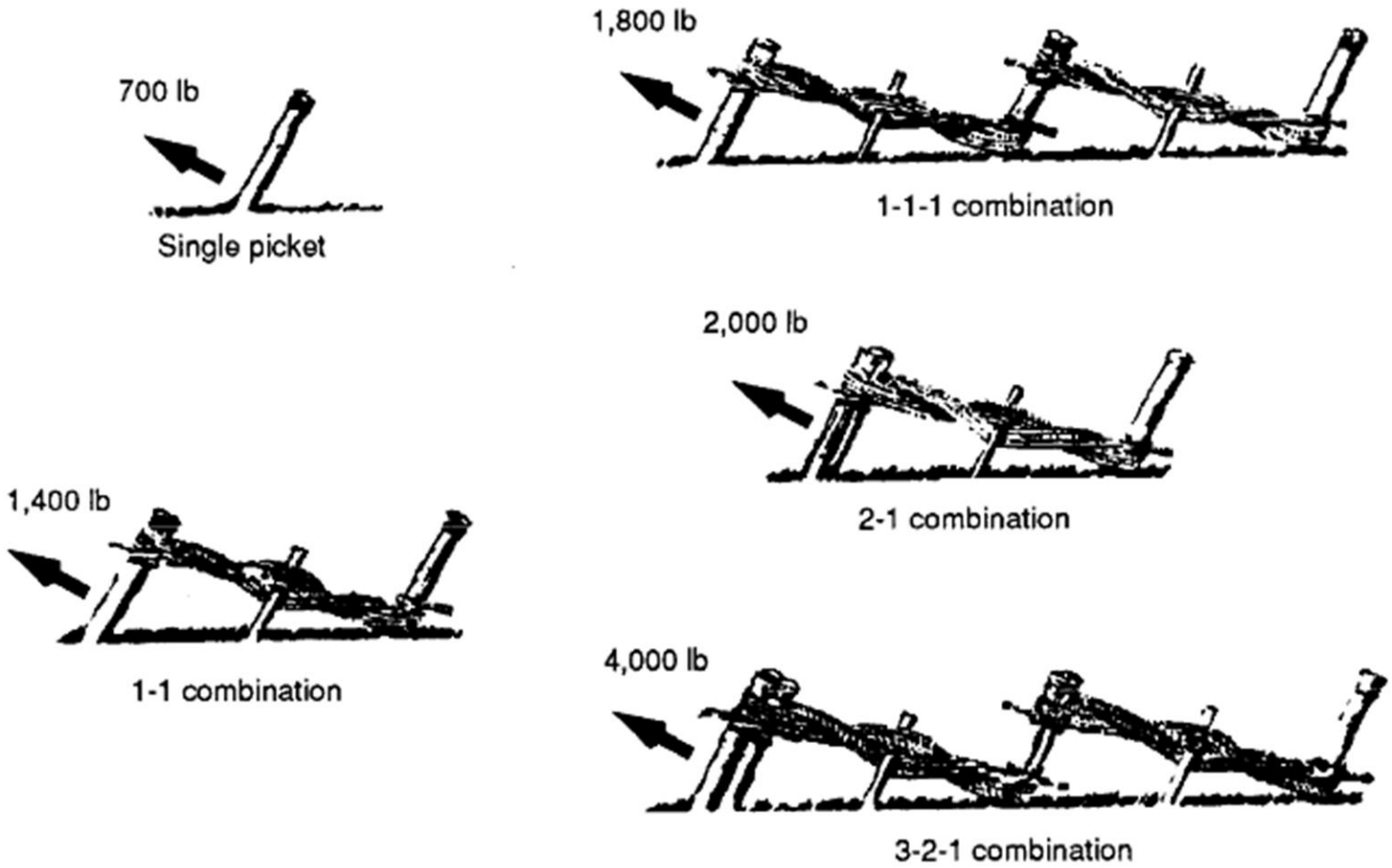

Figure 4-5. Picket holdfasts (loamy soil)

(A) Drive the pickets (steel or wood) into ground 15° minimum from vertical.

(B) Lash the pickets together, starting at the top of the first picket.

(C) Twist the rope with a rack stick, then drive the stick into the ground.

(D) Complete the picket holdfast.

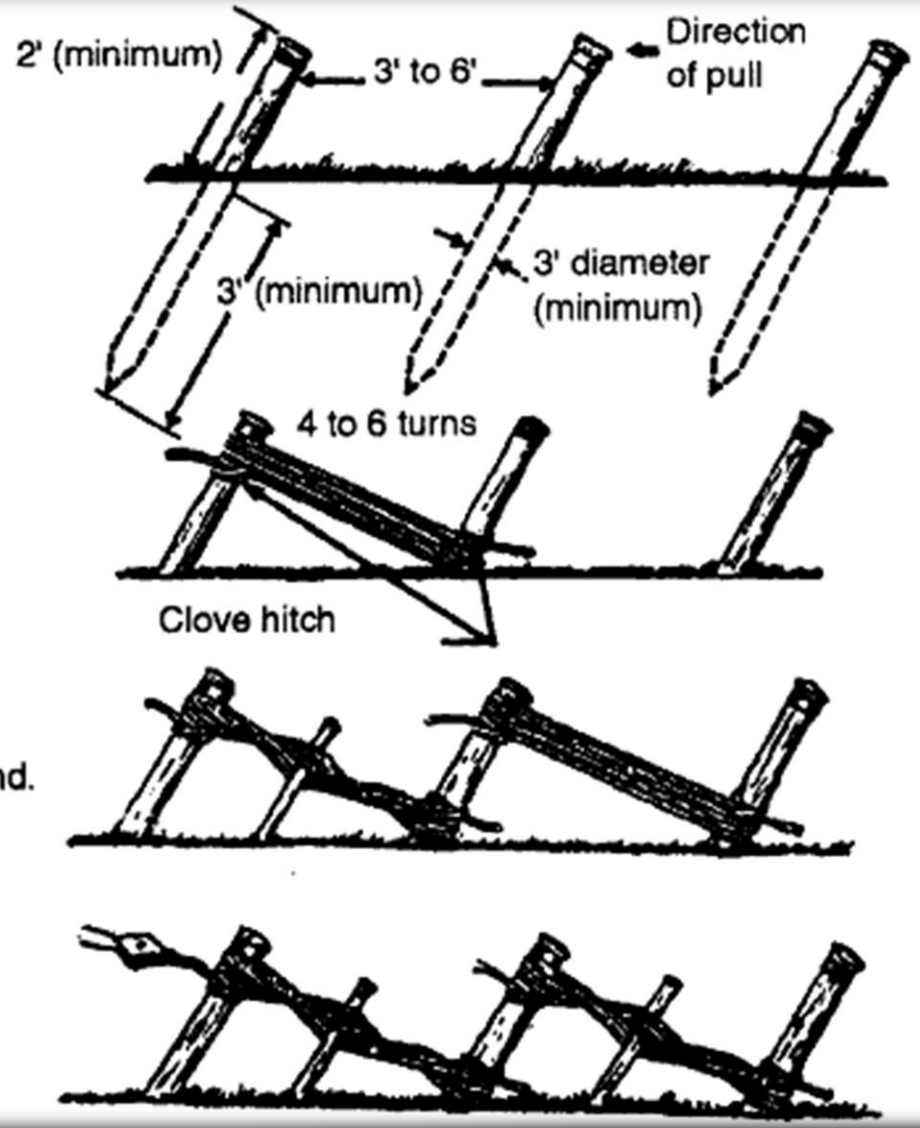

PREFABRICATED ANCHOR SYSTEMS

- Can be moved from place to place.
- Serve as high directional anchors in places where no anchors are available.
- Serve as Point of Attachments (POA)
- Constructed to be set up in different locations and environments.

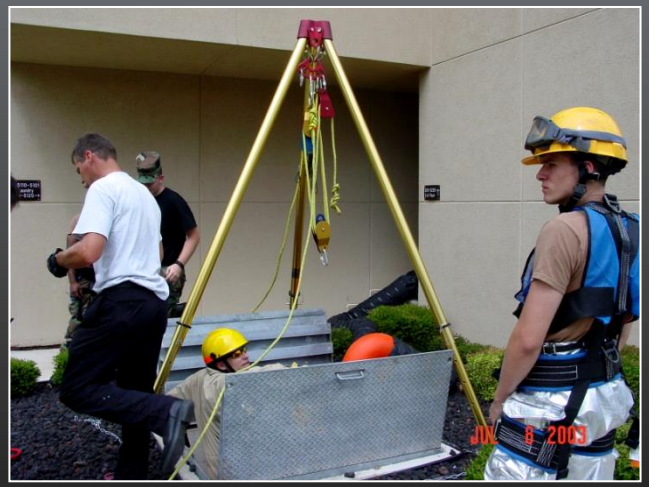

PREFABRICATED ANCHOR SYSTEMS

- Types include:
- Commercial
  - Arizona Vortex
  - SKED Tripod
  - Larkin Frame
  - Airshore Tripods & Gantry
  - Beam clamps

PREFABRICATED ANCHOR SYSTEMS

- Types include:
  - Man-made
    - A-Frames
      - Timber
      - Ladders
    - Timber Tripod
    - Gin Pole
    - Ladder as a Derrick

LASHINGS

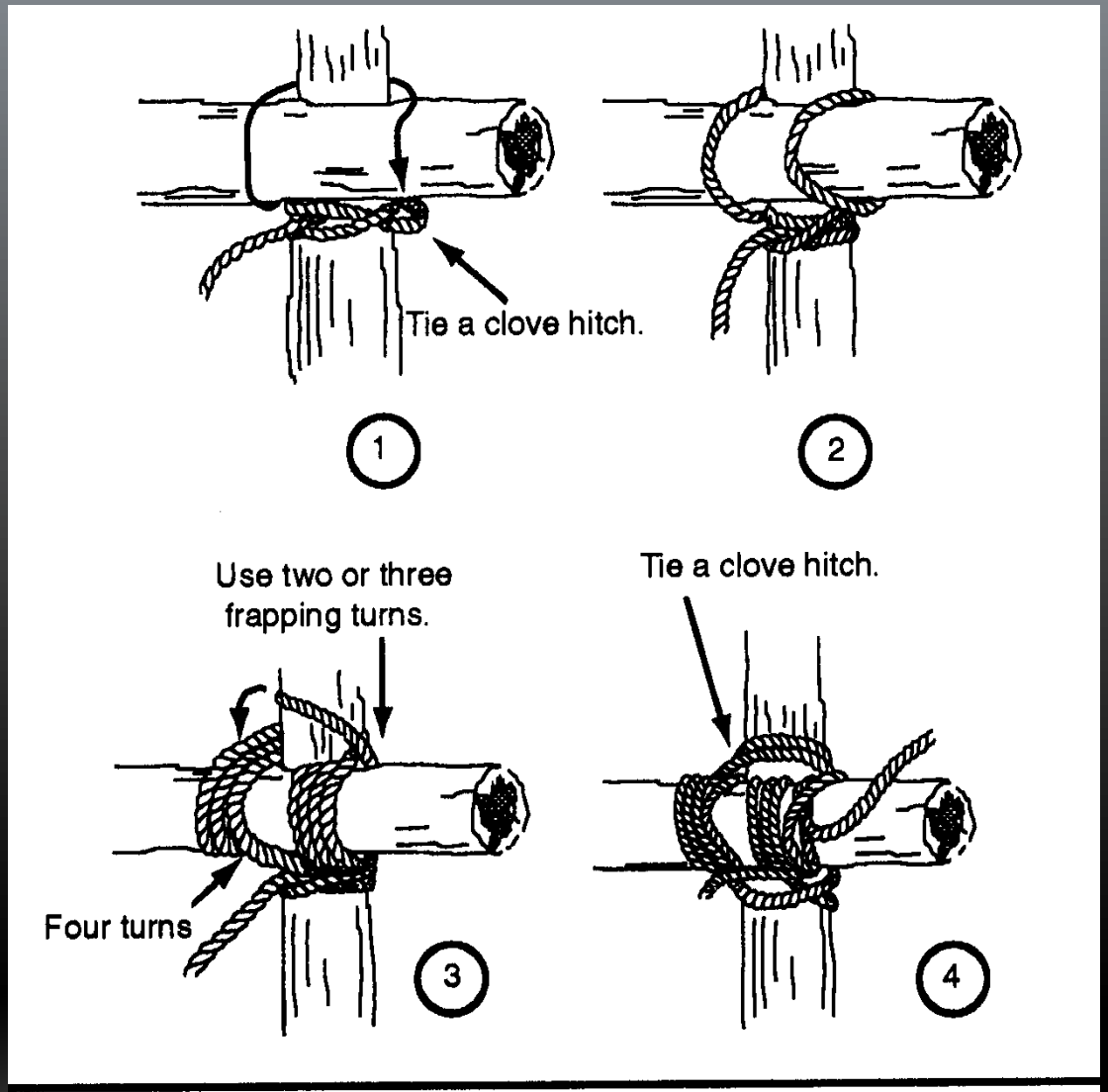

Figure 2-36. Square lashing

LASHINGS

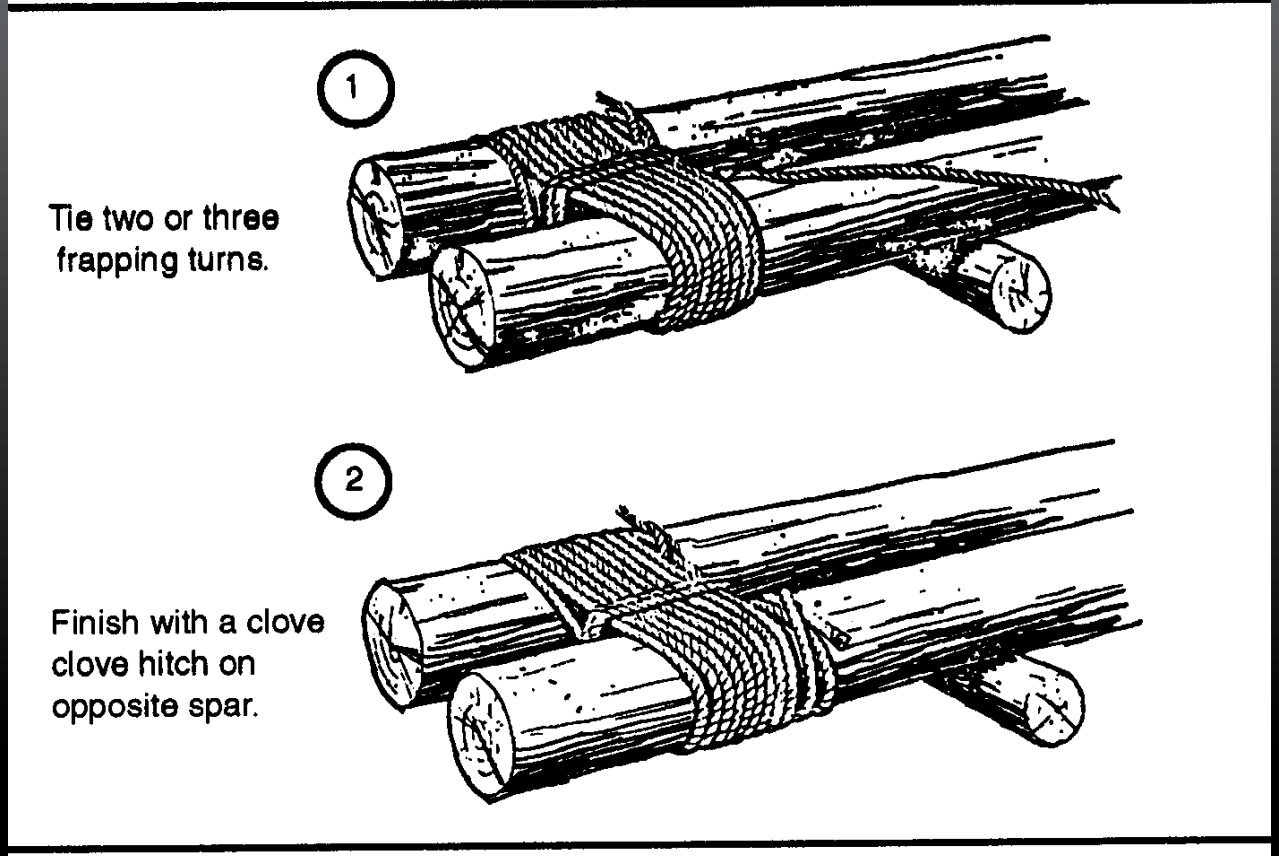

Figure 2-37. Shears lashing

A-Frames

- Used as a portable anchor to lift relatively heavy loads in a single direction forward and backward.

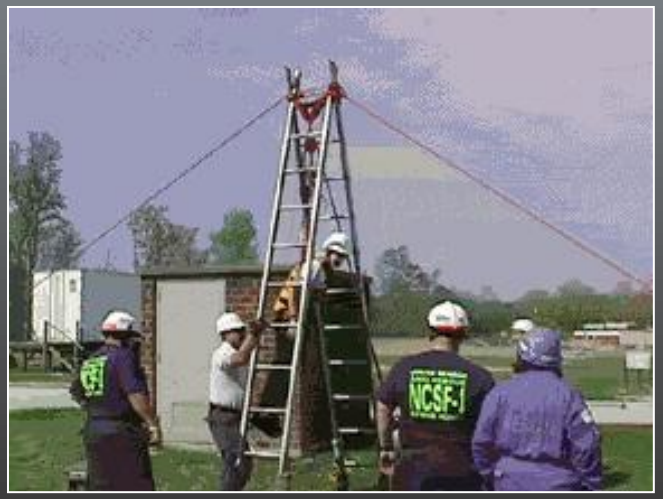

The minimum dimension required for the A-frame is a 4 x 4" x 12' timber.

RIGGING THE TIMBER A-FRAME

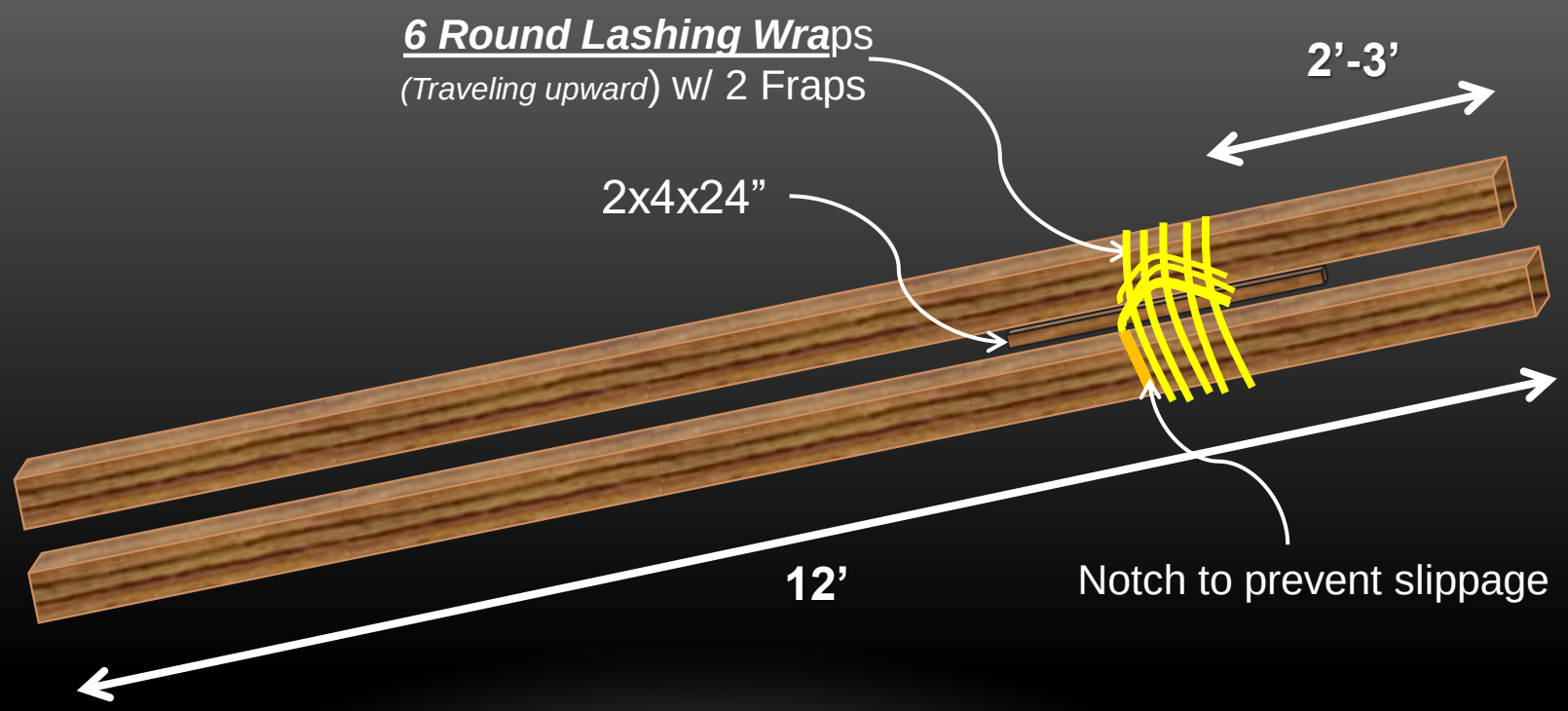

RIGGING THE TIMBER A-FRAME

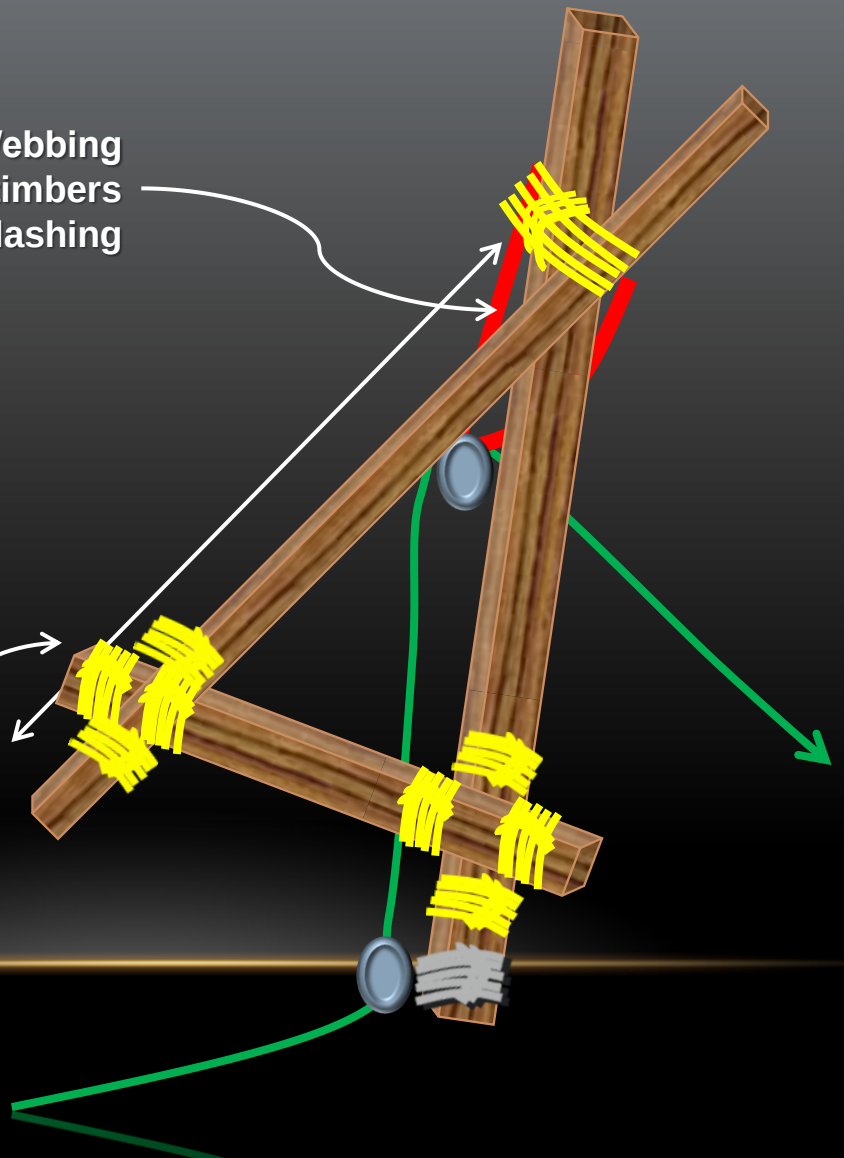

2”x 6’ Webbing resting on timbers not lashing

Fore & Aft Guy line should be 2 times the height of the timber (24’)

3’

Legs are spread 1/3 distance between the bottom of the lashing and the butt ends.

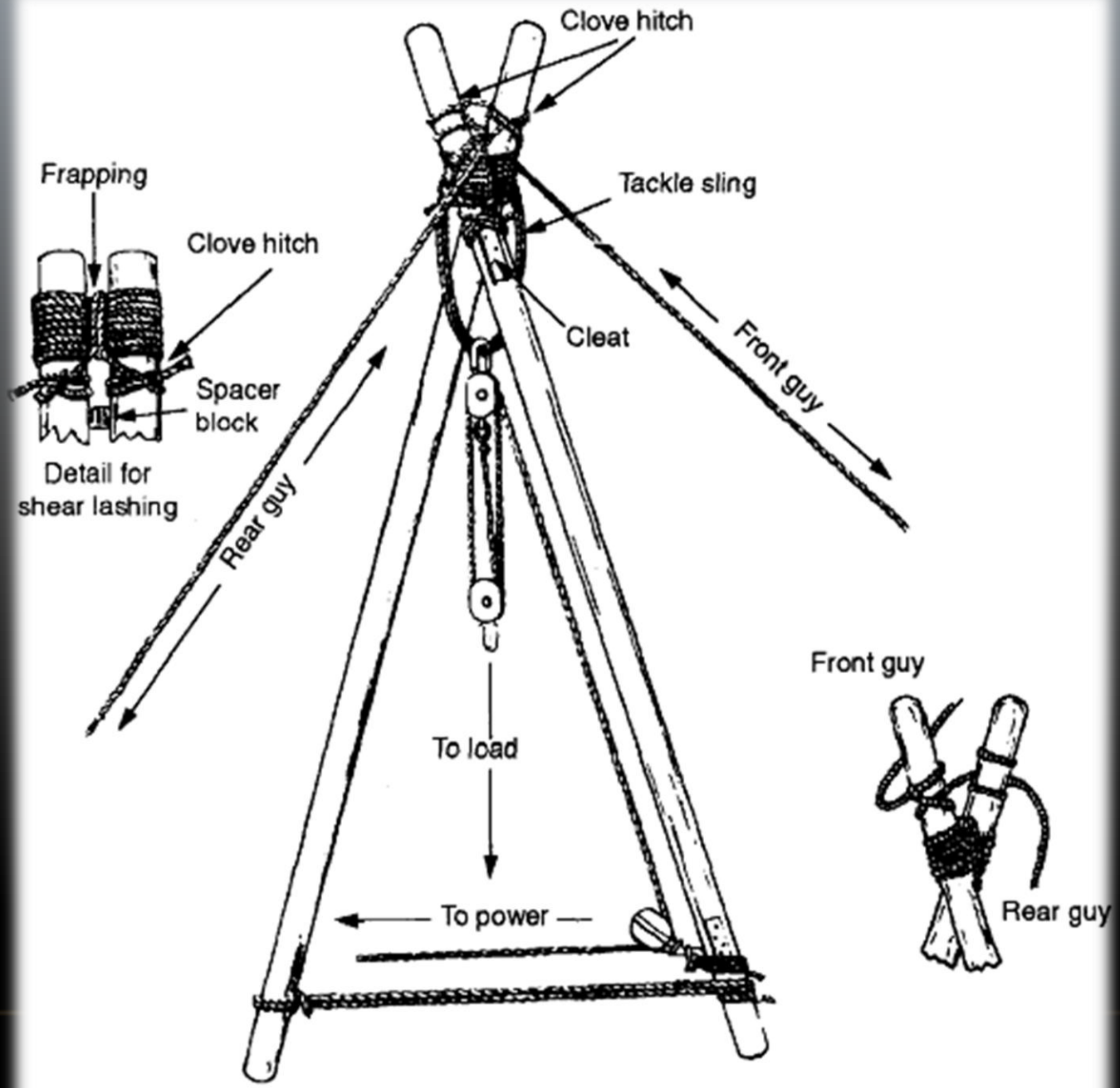

Figure 5-6. Lashing for shears

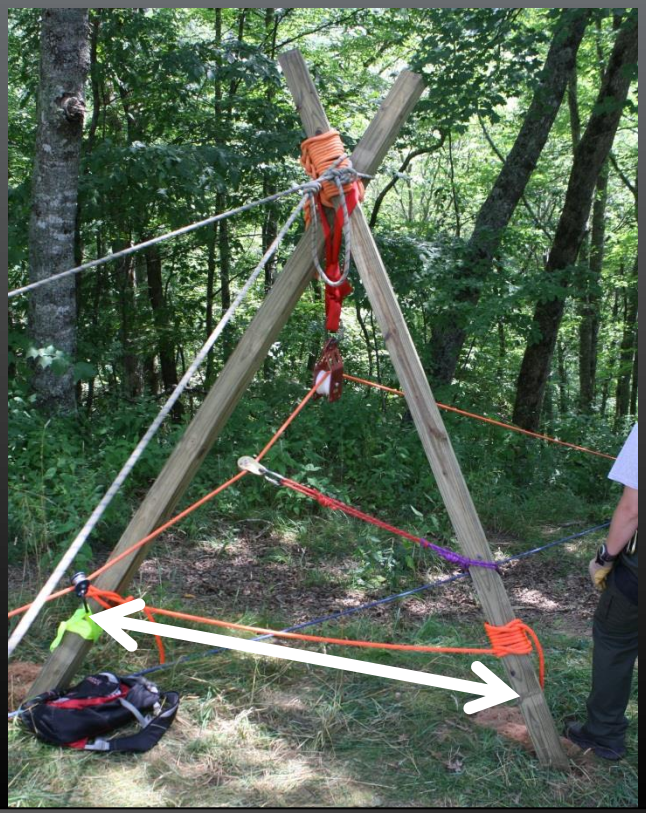

Initial Luff Should Not Be Over 1/5 of the Distance Between The Butt Ends And The Top Lashing
While The Maximum Luff Should Not Be
Over One-third The Distance Between The Butt Ends And The Top Lashing Of The A-frame.

Tripods

- Used to lift loads heavier than those that can be handled by a gin pole or A-frame.
- Have three legs and do not require the use of guy lines.
- Designed to lift loads vertically.
- Dimensions for the timber are 4 x 4″ x 12′ long.

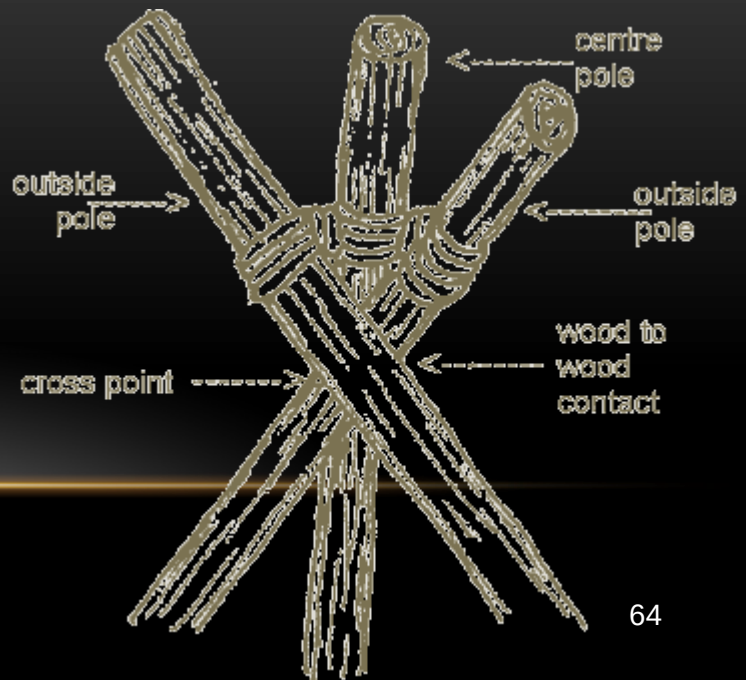

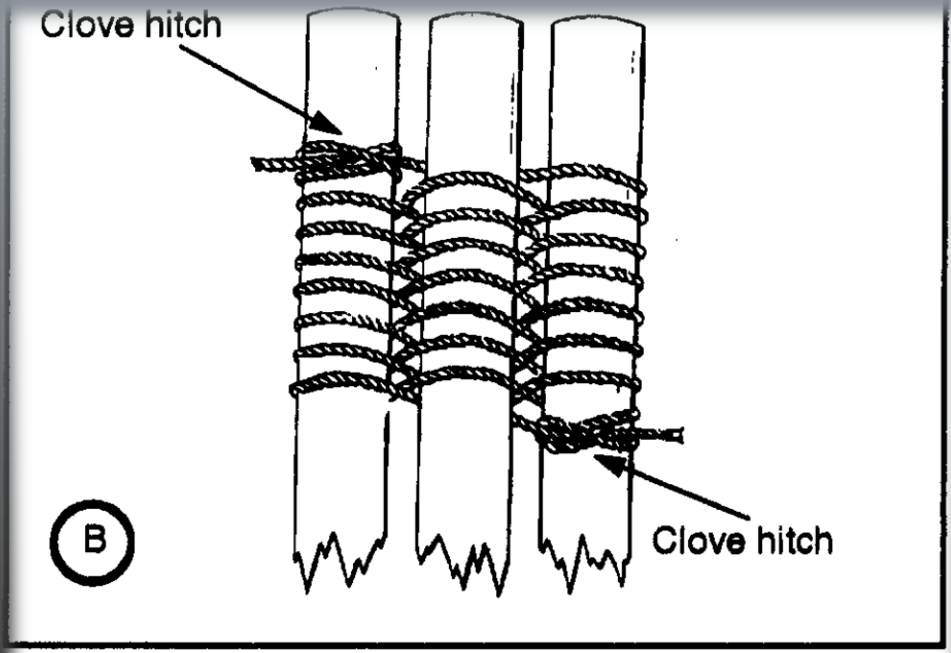

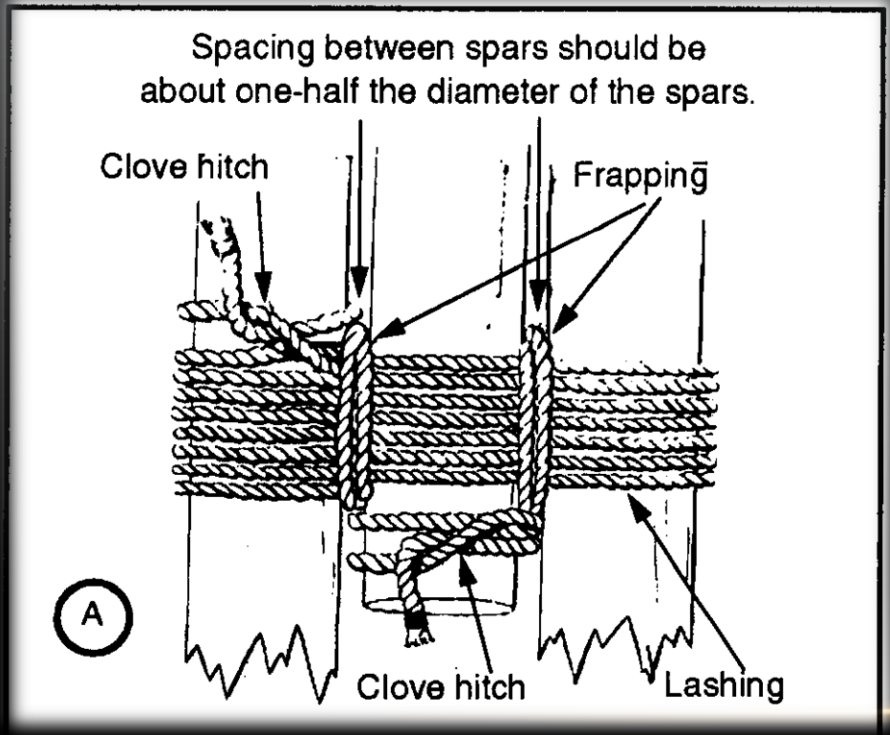

Figure 5-4. Lashing for a tripod

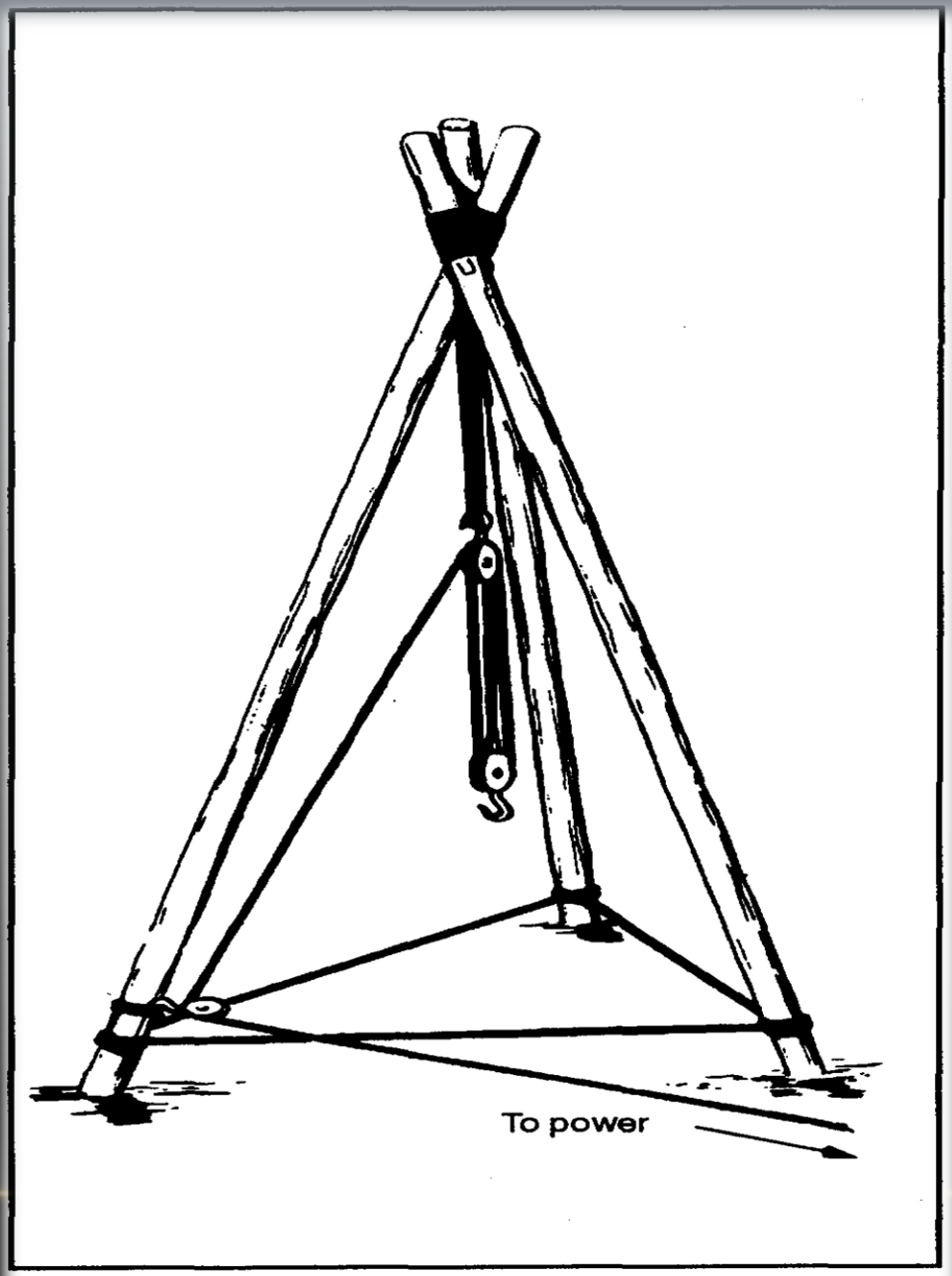

Figure 5-5. Assembled tripod

Gin Pole

- Allows the object being lifted to be moved to the left or right, in addition to the front and rear.
- Consists of one or two timbers lashed together for strength with the top supported by the use of four guy lines.

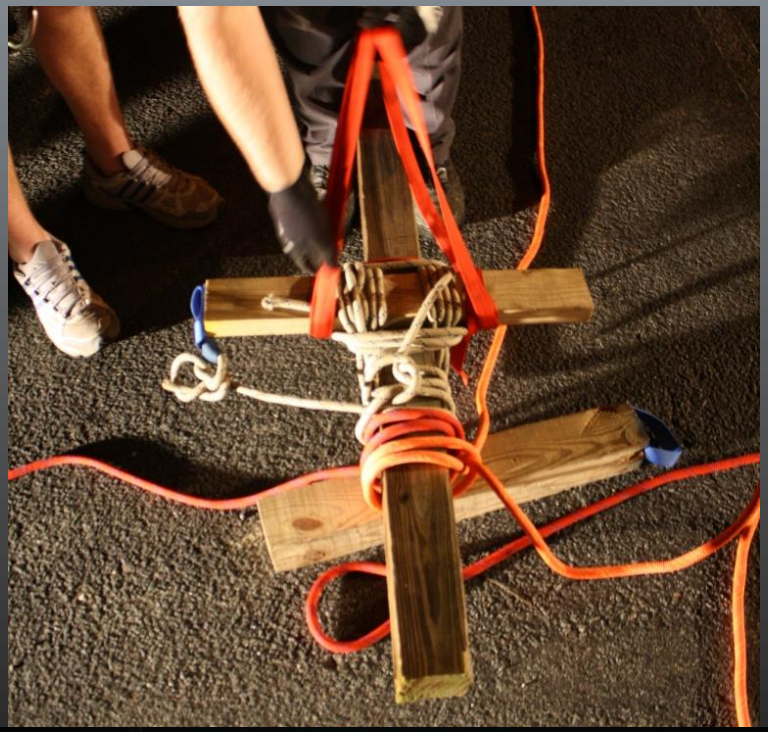

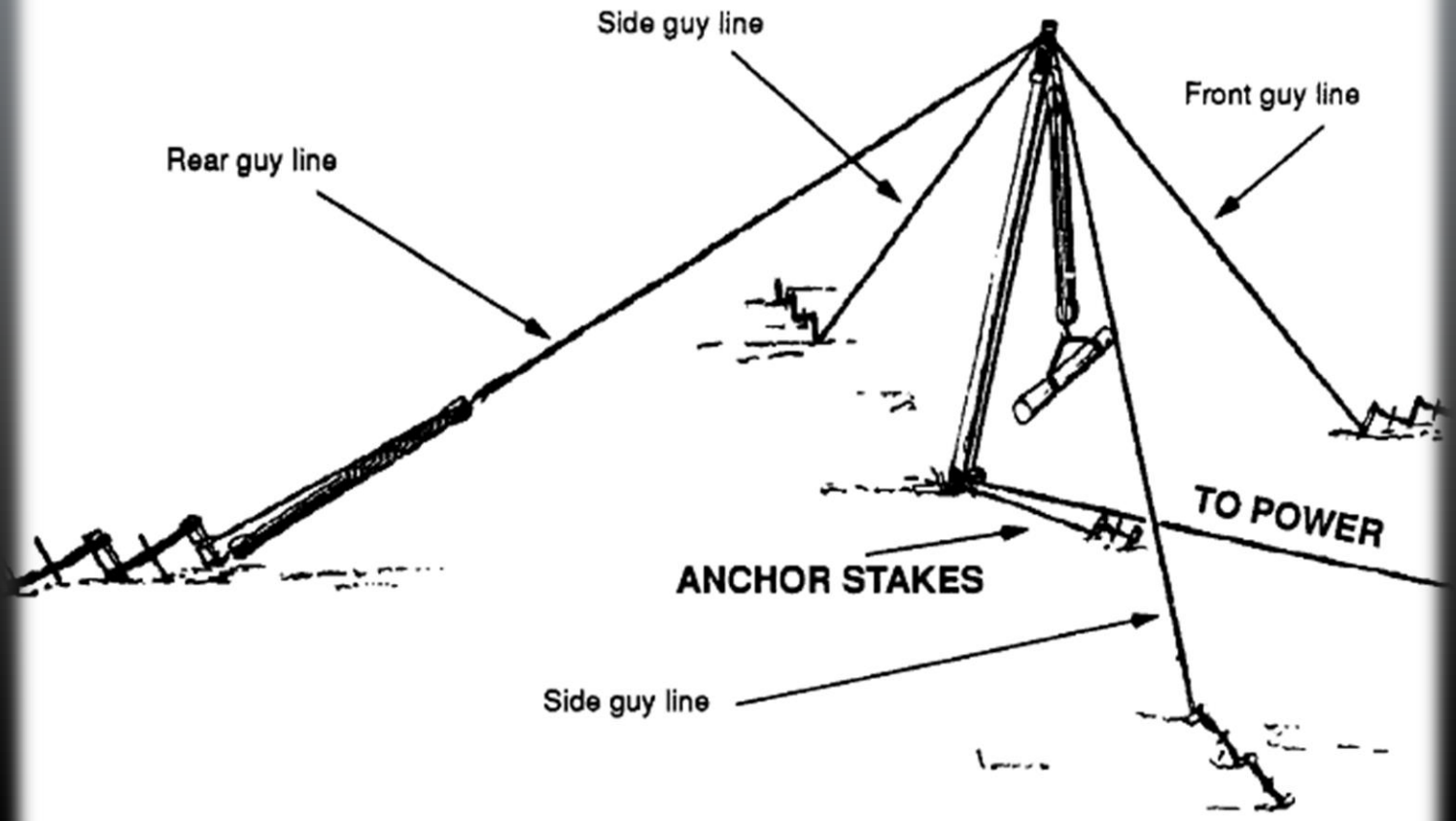
Side guy line
Front guy line
Rear guy line
TO POWER
ANCHOR STAKES
Side guy line

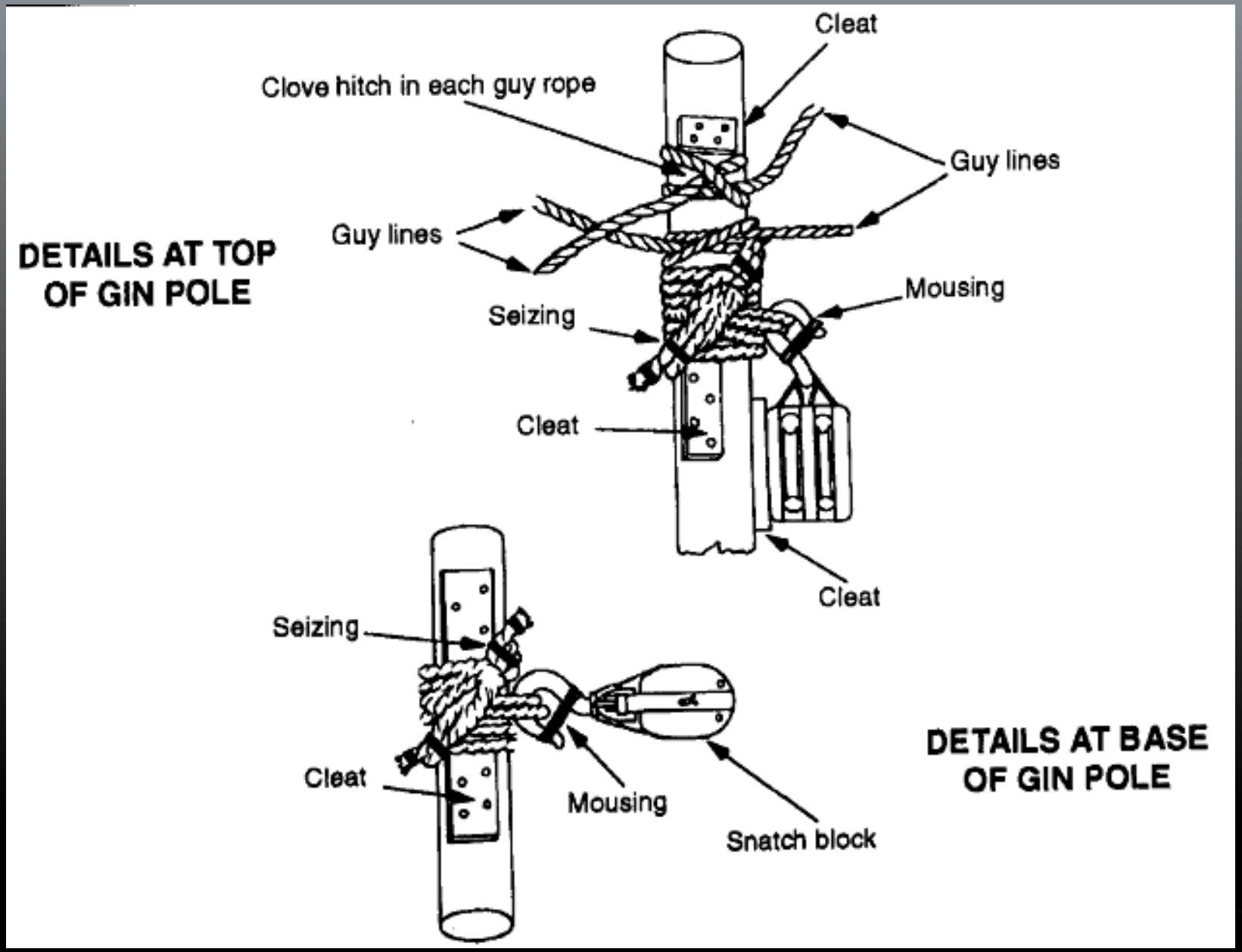
Cleat
Clove hitch in each guy rope
Guy lines
Guy lines
DETAILS AT TOP OF GIN POLE
Mousing
Seizing
Cleat
Cleat
Seizing
Cleat
Mousing
Snatch block
DETAILS AT BASE OF GIN POLE

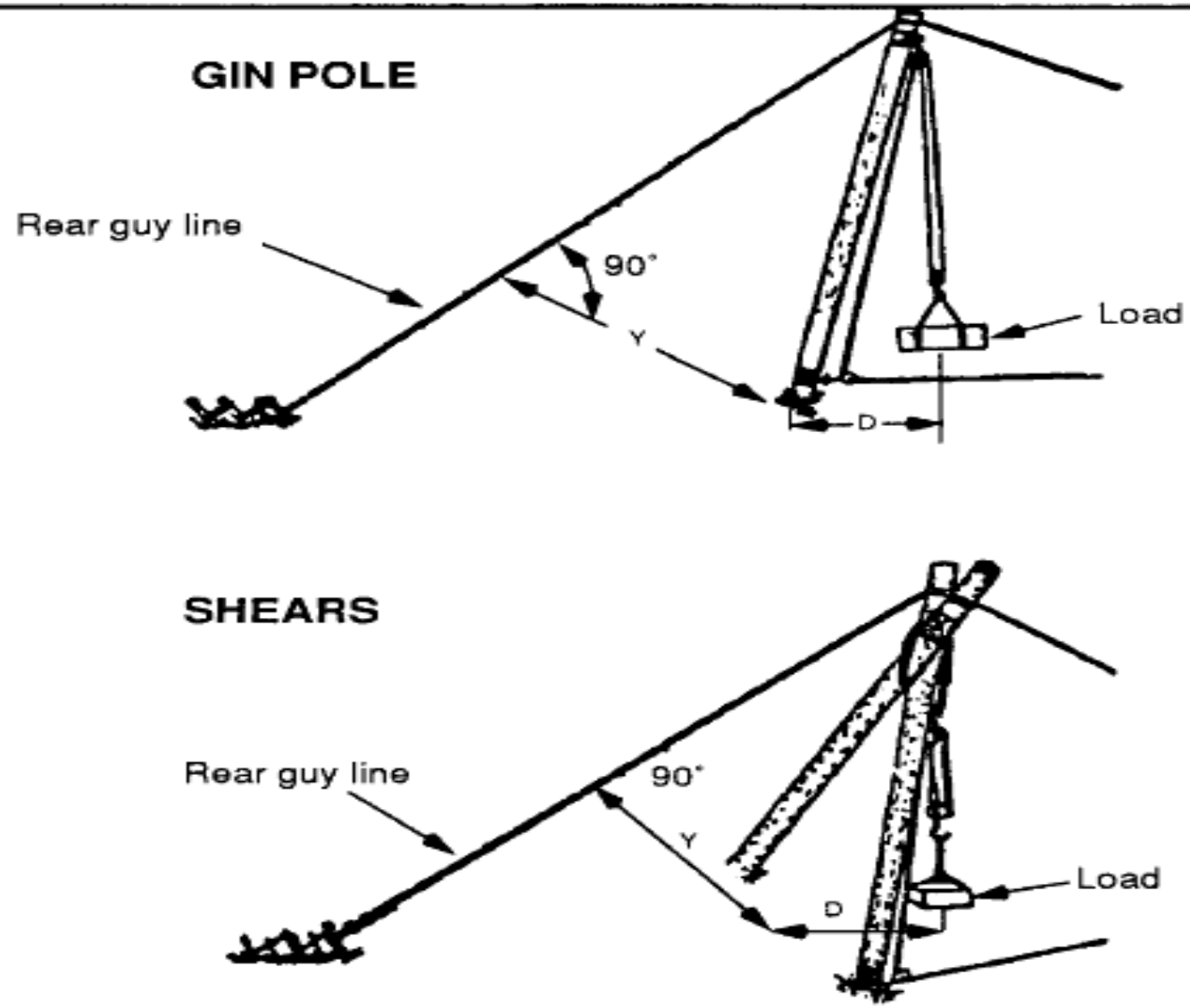

Figure 4-19. Gin pole and shears

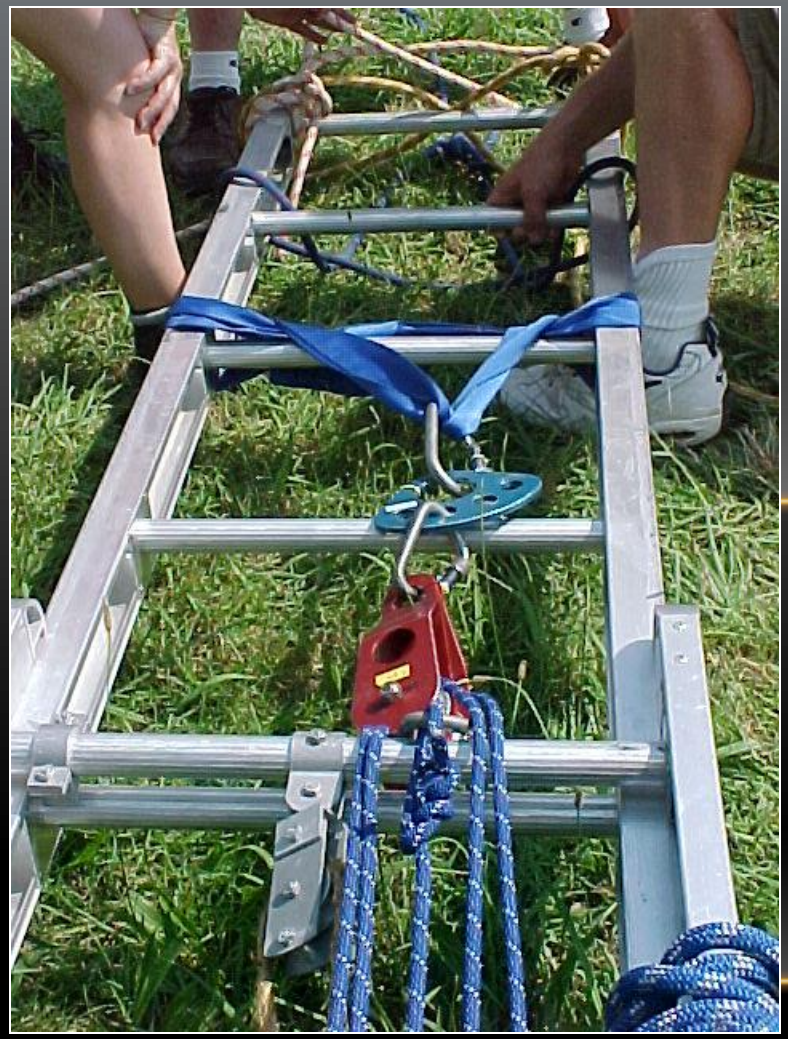

LADDER RIGGING

Fire Ladder Capacities

- According to NFPA 1932: Standard for Testing and Maintaining Fire Service :
- The working load of a straight wall ladder positioned in an acceptable climbing angle is 750 pounds.
- The working load of an extension ladder positioned in an acceptable climbing angle is 750 pounds.
- All structural components of ground ladders shall be constructed of materials so that the ground ladder maintains at least 75% of the strength necessary to pass all test requirements in this standard at 300°F.

Ladder Rigging in Trench Rescue

- Ladder A-Frame
- Ladder Slide
- Ladder as a Derrick

Ladder A-Frame

Ladder Derrick

Ladder Slide

Videos; Ladder Slide

Videos; Ladder Derrick

Videos; Ladder A Frame

Videos; Ladder Slide

Videos; Ladder Hinge

Videos; Timber Tri-pod

Videos; Timber A-Frame

Videos; Timber Tri-Pod (Alternative)

END OF LECTURE

HAND'S ON TRAINING SESSION

Timber